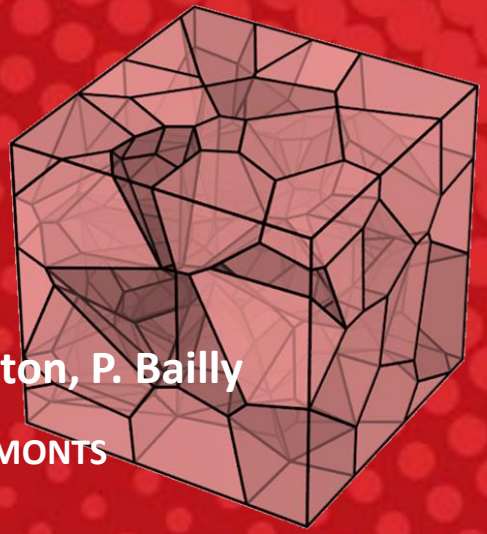

David Drouet, Didier Picart, Eric Bruneton, P. Bailly

CEA DAM Le Ripault, BP 16 F-37260 MONTS

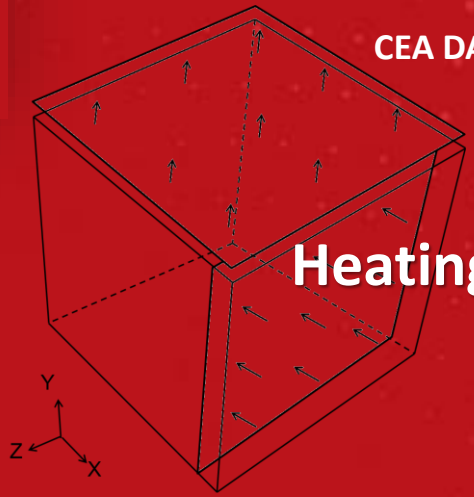

Heating of HMX-based PBX during low velocity impact

Abstract Number : 22174

1 - Reaction Threshold

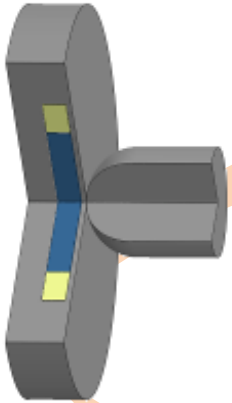

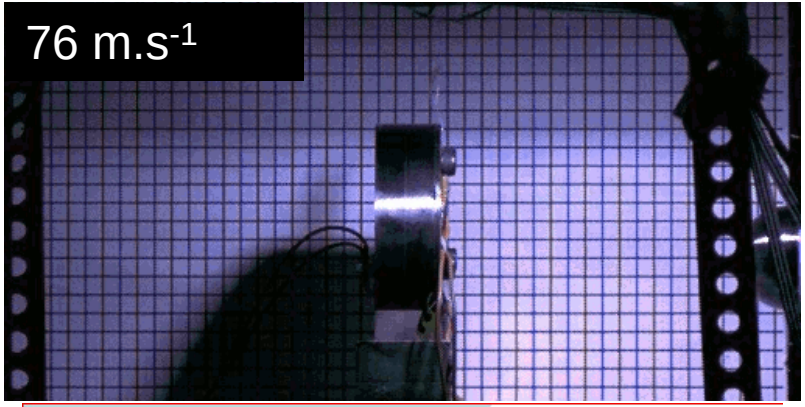

[4]

2 - Microstructure

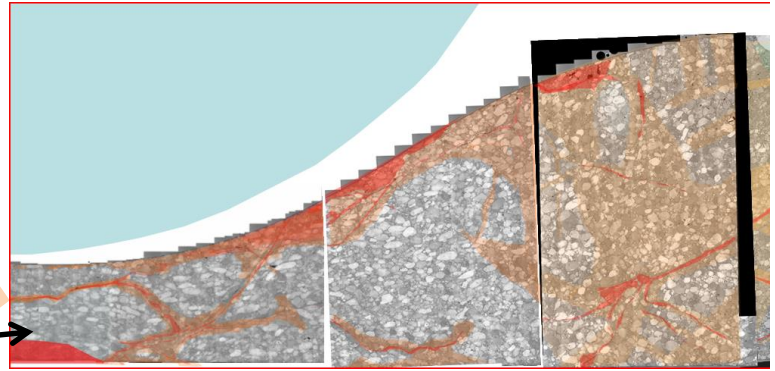

[2]

Up to 80% plastic strain + compaction + few micro cracks
+ phase transformation + reacted material

For this work, we choose the **Crystal plasticity**.

[2] Trumel, Lambert, Belmas, 14th Int Detonation Symp, 2010
[4] Picart, Ermisse, Biessy, Bouton, Trumel, Int.J of Energetic Materials and Chemical Propulsion pp487-509

1 - Material

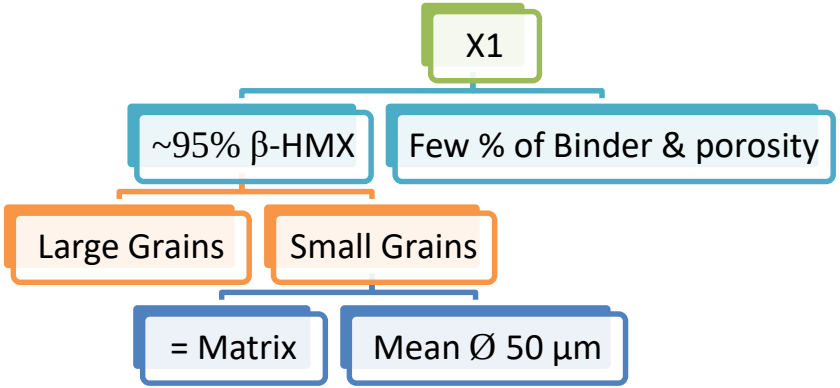

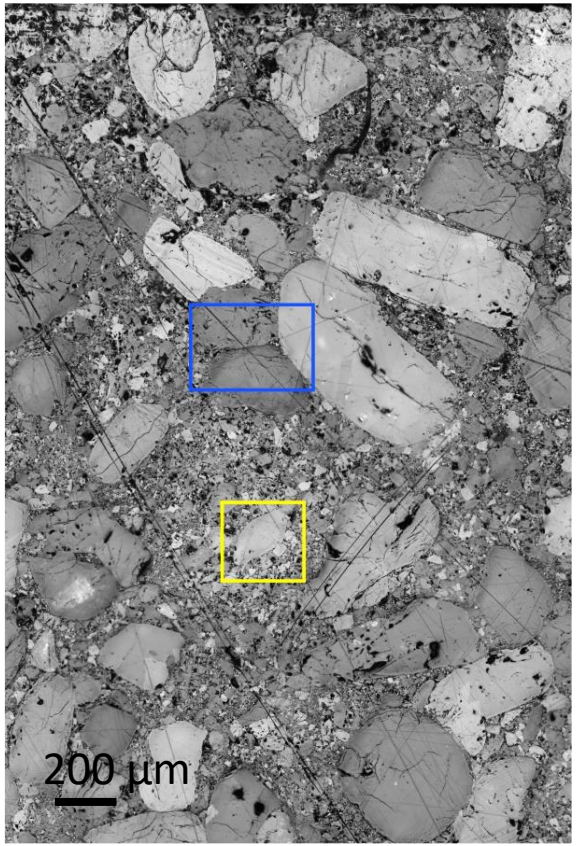

[4]

2 - Problematics

Investigate the role of **crystal plasticity** in the **localization** of **heat production** before **ignition**.

No chemistry
No thermal conduction

[4] Picart, Ermisse, Biessy, Bouton, Trumel, Int.J of Energetic Materials and Chemical Propulsion pp487-509

OUTLINE

2- Numerical Setup

3- Results

4- Discussion/Conclusion

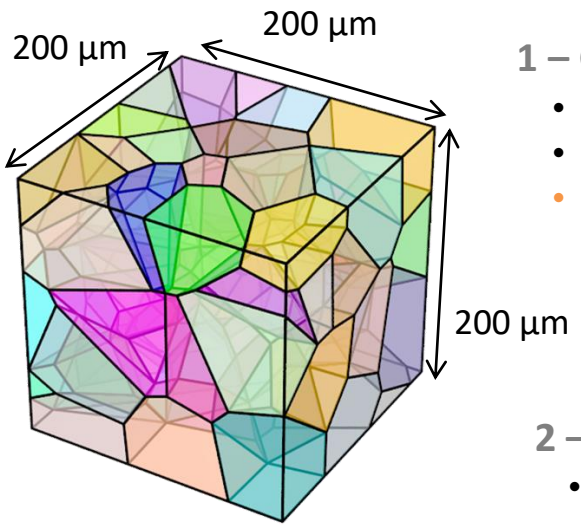

1 – Geometry

- 68 **Voronoi** particles
- user subroutine **VuMat**
- **Lagrangian explicit** Abaqus solver

$$\dot{b} = -\frac{\dot{a}}{a^2}$$

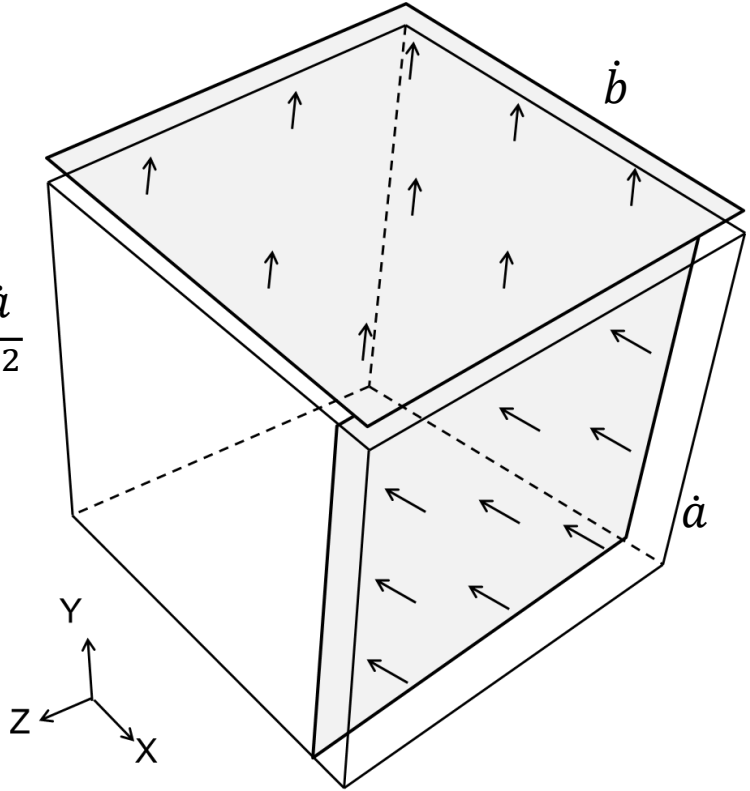

2 – Loading

- Constant volume shear
- 800 MPa confinement

3 – Other

- Max equivalent **von Mises strain of 60%**
- Adiabatic
- No Viscosity
- 10 simulations

1 - Elastic anisotropic (GPa)[5]

Pressure	C_{11}	C_{22}	C_{33}	C_{44}	C_{55}	C_{66}	C_{12}	K_{VRH}
0 MPa	20.37	19.95	17.93	10.66	7.39	11.60	10.64	13.72
800 MPa	33.23	28.38	25.52	13.18	13.64	13.19	14.11	20.75

Pressure	C_{13}	C_{23}	C_{15}	C_{25}	C_{35}	C_{46}	G_{VRH}	E_{VRH}
0 MPa	9.93	13.08	-1.27	5.03	1.53	5.03	6.11	15.87
800 MPa	16.62	20.02	-2.64	6.80	1.70	6.31	8.48	22.27

2 - Crystal plasticity [6]

N°	Miller indices $P2_{1/n}$	Sliding direction $P2_{1/n}$	Plan $\overrightarrow{m^{\alpha}}$			Direction $\overrightarrow{s^{\alpha}}$			Critically Resolved shear stress[6] MPa
1	$(\mathbf{0\,0\,\bar{1}})$	$\langle \mathbf{1\,0\,0} \rangle$	**(0,000**	**0,000**	**1,000)**	**<1,000**	**0,000**	**0,000>**	173.0
2	$(\mathbf{\bar{1}\,0\,\bar{1}})$	$\langle \mathbf{1\,0\,\bar{1}} \rangle$	**(0,660**	**0,000**	**-0,751)**	**<0,751**	**0,000**	**0,660>**	38.7
3	$(\bar{1}\,1\,0)$	$\langle 0\,0\,1 \rangle$	(0,845	0,500	-0,192)	<0,222	0,000	0,975>	72.2
4	$(0\,\bar{1}\,\bar{1})$	$\langle \bar{1}\,1\,\bar{1} \rangle$	(0,000	0,545	0,838)	<0,349	0,786	-0,511>	95.9
5	$(\bar{1}\,0\,\bar{1})$	$\langle 0\,\bar{1}\,0 \rangle$	(0,660	0,000	-0,751)	<0,000	1,000	0,000>	96.1
6	$(0\,\bar{1}\,\bar{1})$	$\langle 1\,0\,0 \rangle$	(0,000	0,545	0,838)	<1,000	0,000	0,000>	99.2
7	$(0\,\bar{1}\,0)$	$\langle 1\,0\,0 \rangle$	(0,000	1,000	0,000)	<1,000	0,000	0,000>	103.0

Maximum

Minimum

[5] Mathew, Sewell, Propellant, Explosives, Pyrotechnics, 2018.
[6] Barton, Winter, Reaugh, Modelling Simulation Mat Sci Eng, 2009.

Crystal plasticity model

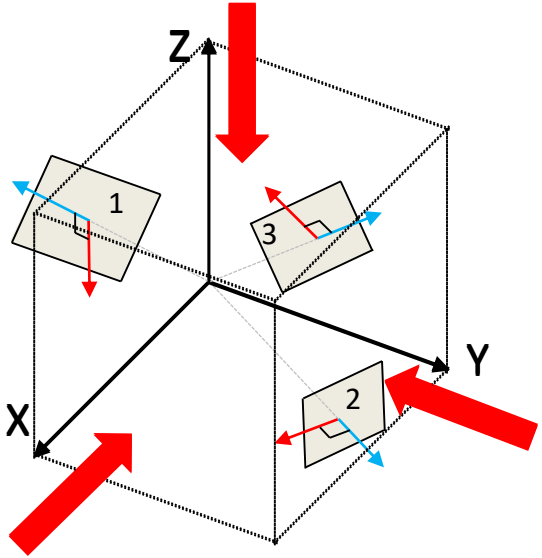

Normals

Directions

Projection tensor

$$\underline{\underline{m_s^\alpha}} = \frac{1}{2}\left(\overrightarrow{m^\alpha} \otimes \overrightarrow{s^\alpha} + \overrightarrow{s^\alpha} \otimes \overrightarrow{m^\alpha}\right)$$

Additive plasticity

$$\underline{\underline{\dot{T}}} = \underline{\underline{\underline{\underline{C}}}} : \left(\underline{\underline{D}} - \underline{\underline{D^p}}\right)$$

each system:
perfect plasticity

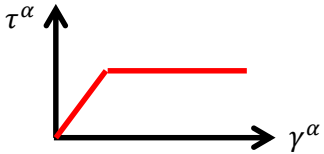

$$\Delta\tau^\alpha - \underline{\underline{m_s^\alpha}} : \Delta\underline{\underline{\sigma^p}} + \underline{\underline{m_s^\alpha}} : \sum_\beta \underline{\underline{\underline{\underline{C}}}} : \underline{\underline{m_s^\beta}} \left|\Delta\gamma^\beta\right| sgn\left(\tau_s^\beta\right) = 0$$

+

$$0 = |\tau^\alpha| - \tau_0^\alpha - \underline{\underline{H}} \cdot \gamma^\alpha$$

$$\underline{\underline{D^p}} = \sum_\alpha \dot{\gamma}^\alpha sgn(\tau^\alpha) \cdot \underline{\underline{m_s^\alpha}}$$

Plastic strain rate

Macroscopic Mechanical Response

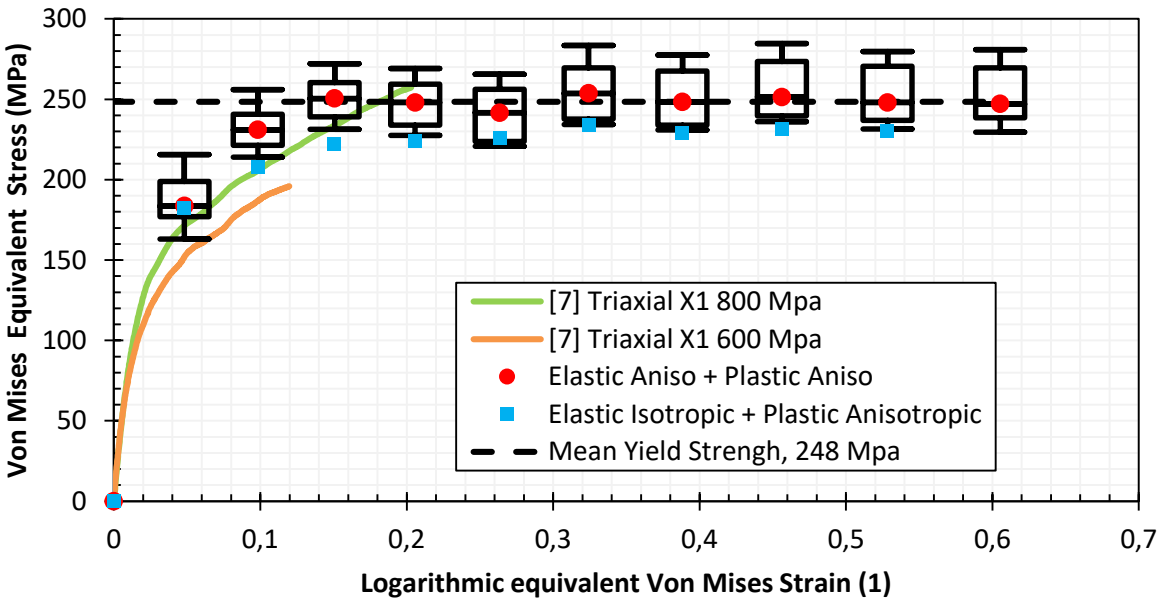

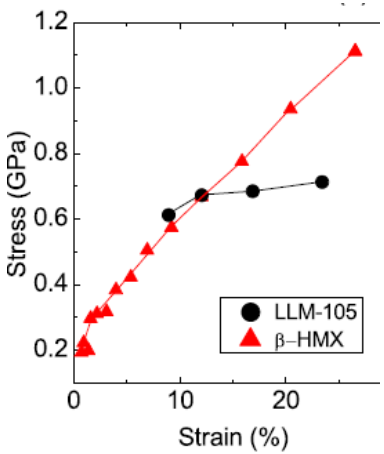

[8]

1 – Similarity with experiments in the beginning of the simulation

2 – Elastic anisotropic – Elastic Isotopic

3 – **Hardening** behavior

[7] Trumel, Lambert, Vivier, Sadou, in Material under extreme loading. Application to penetration and impact, eds Wiley & sons, 2010.
[8] Kucheyev, Gash, Lorenz, in *Mater. Res. Express*, 025036

- 15 µm removed
- A section view

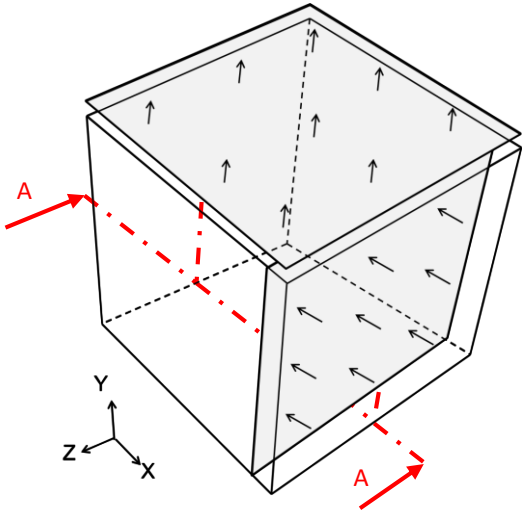

N°	Miller indices $P2_{1/n}$	Sliding direction $P2_{1/n}$	Critically Resolved shear stress[6] MPa
1	$(0\,0\,\bar{1})$	$\langle 1\,0\,0 \rangle$	173.0

AA cut: Un-strained plot

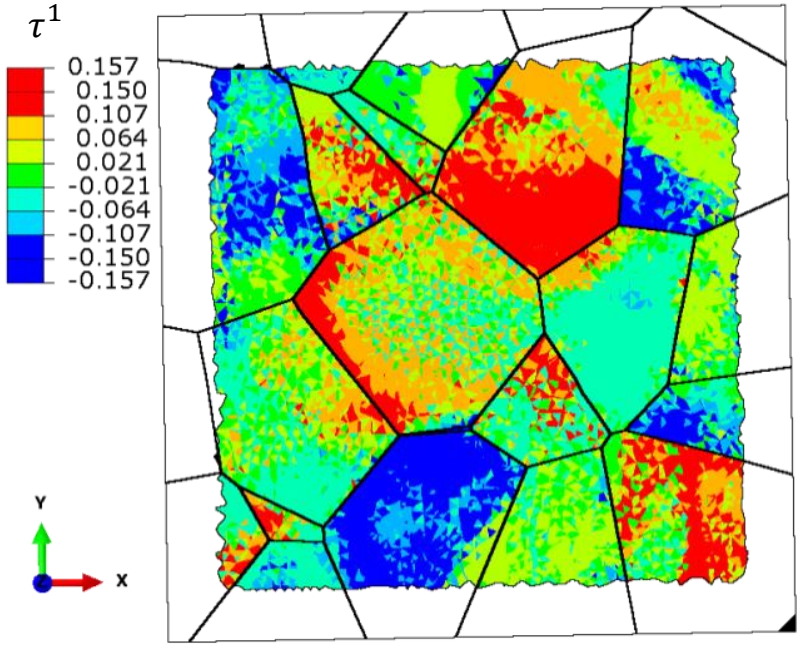

1- The crystal interactions causes strong **heterogeneities**
2- The critical resolved shear stress is never achieved => **no plastic strain**

Results: Thermal heterogeneities

N°	Miller indices $P2_{1/n}$	Sliding direction $P2_{1/n}$	Critically Resolved shear stress[6] MPa
4	$(0\,\bar{1}\,\bar{1})$	$\langle\bar{1}\,1\,\bar{1}\rangle$	95.59

- 15 µm removed
- A section view

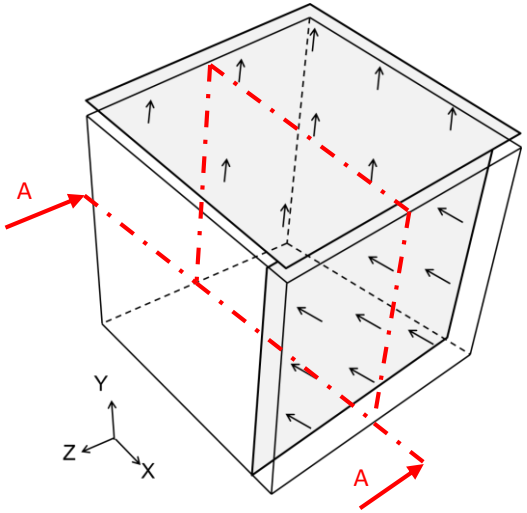

AA cut: Strained plot

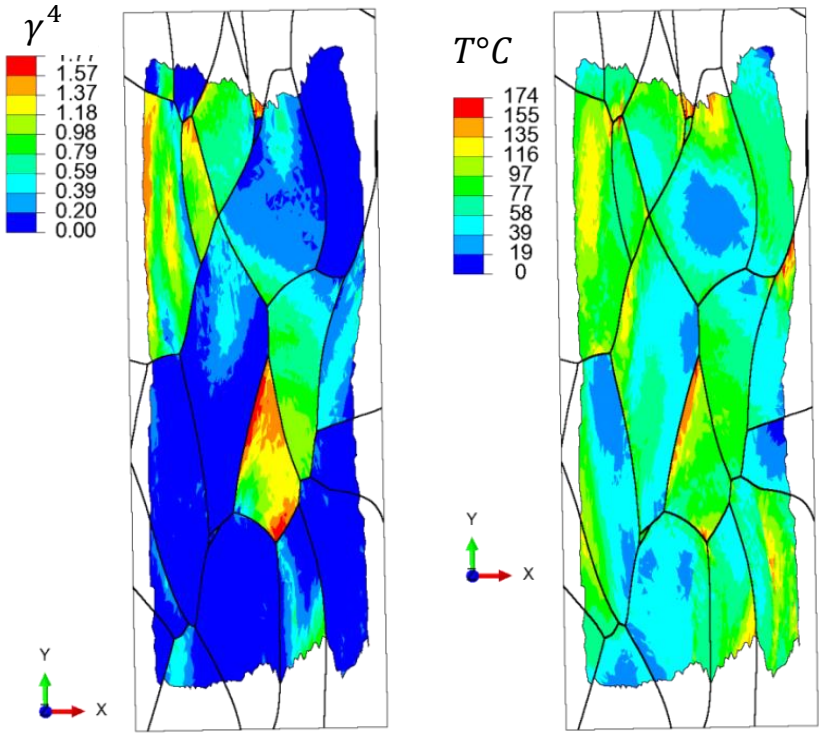

1- Thermal **heterogeneities**

2- Strong and **localized** increase in temperature

Macroscopic Thermal Response

Strong variations with the maximum temperatures

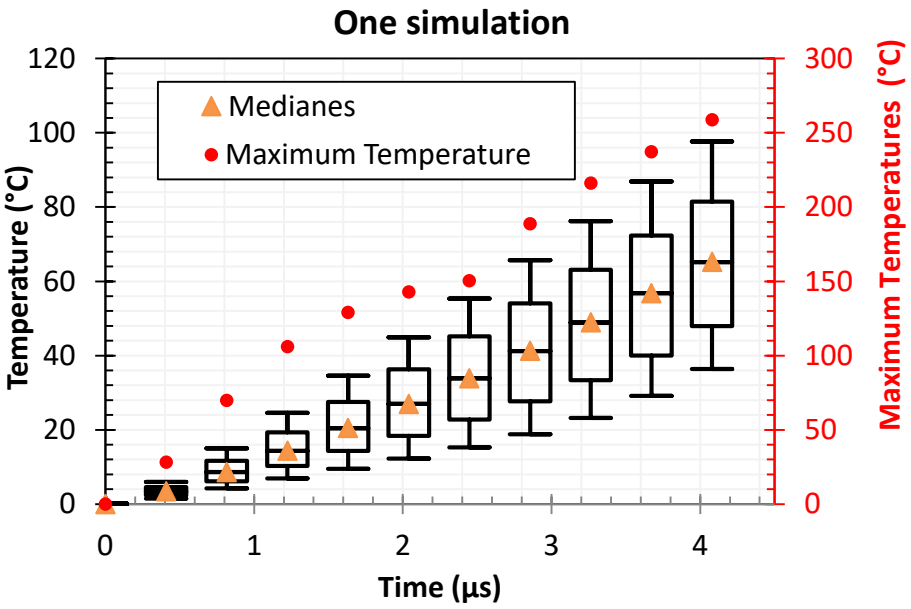

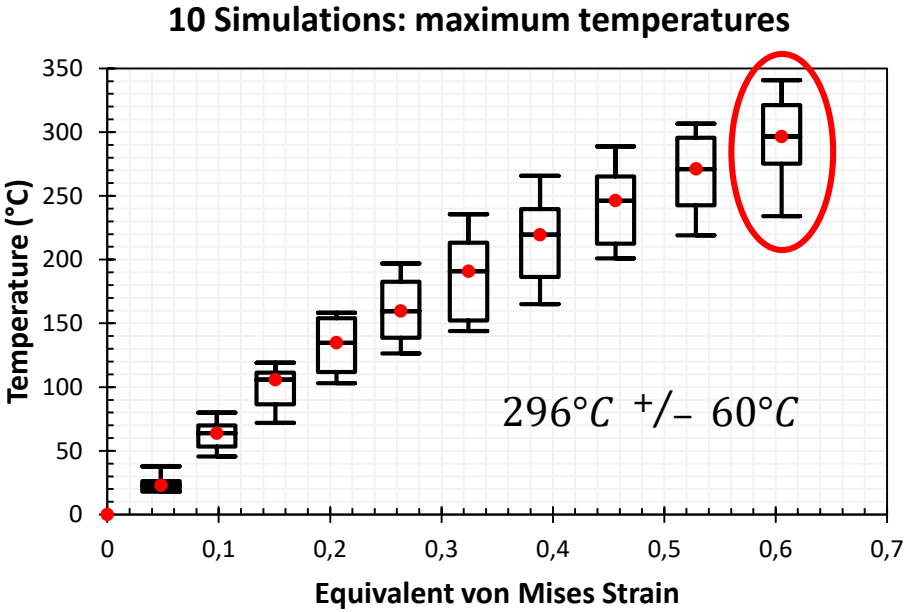

1 - Crystal plasticity provides a **major contribution** to the heat production

Warning element quality!

2 - The localized heating induced by heterogeneities is good candidate for **Hotspot** formation

3 – Extrapolation : 120% von Mises strain are **currently** needed to reach 734°C

CONCLUSION

- Anisotropic plastic response provides a major heat contribution that can lead to **ignition**

- Correlation between the macroscopic stress and the experimental data
  - **Crystal plasticity** as the main component of the mechanical dissipation

- **Maximum** temperature is ‘proportional’ to the **median** temperature

- Extrapolation on maximum temperature to reach ignition levels
  - 100% shear strain target to reach 613°C
  - 120% shear strain target to reach 734°C

  } >> 80% plastic strain

Future works

- Adaptive **remeshing** (dispersion on the maximal temperatures)
- **Hardening** in the plastic behavior of HMX
- In-depth **statistical study** (300 simulations?)
- Evaluation of the simulated volume size for the convergence (200 x 200 x 200 µm)
- **Thermal diffusion** behavior to be added
  - Pressure dependent β-δ phase transformation to be added

THANK YOU FOR YOUR ATTENTION

May I answer your questions?

References

[1] Henson B., Smilowitz L., Asay B., Dickson P., J. Chem. Phys. 117, pp. 3780, 2002

[2] Trumel H., Lambert P., Belmas R., in proc. 14th int. Detonation Symp. Coeur d'Alene, USA, 2010

[3] Vial J., Picart D., Bailly P., Delvare F., Modelling Simul. Mater. Sci. Eng., 21, pp. 16, 2013

[4] Picart, Ermisse, Biessy, Bouton, Trumel, Int.J of Energetic Materials and Chemical Propulsion pp487-509

[5] Mathew N., Sewell T., Propellant, Explosives, Pyrotechnics, 43, pp.223-227, 2018.

[6] Barton N., Winter N., Reaugh J., Modelling And Simulation In Materials Sicence And Engineering, 17, pp. 19, 2009.

[7] Trumel H., Lambert P., Vivier G., Sadou Y., in Material under extreme loading. Application to penetration and impact, eds Wiley & sons, pp. 179-204, 2010.

[8] Kucheyev S. O., Gash A. E., Lorenz T., in *Mater. Res. Express,* 1, 025036

DE LA RECHERCHE À L'INDUSTRIE

Appendix