U.S. ARMY COMBAT CAPABILITIES DEVELOPMENT COMMAND – ARMAMENTS CENTER

Isostatic Pressing of PAX-3 High Explosive

Sean Swaszek (US Army)
Mechanical Engineer
FCDD-ACM-EW

Jake Leenstra (NGIS)
Mechanical Engineer

BACKGROUND

- **XM1147 Advanced Multi-Purpose is a new 120mm tank munition developed by the US Army and NGIS**
- **During development the warhead was loaded with a multi-increment PAX-3 High Explosive charge**
  - HMX, Aluminum, Binder
- **Inspection had shown defects occurring between pressing increments**
- **Isostatic Pressing was investigated to evaluate solutions for loading improvements**
- **PAX-3 had been used in isostatic pressing to form PFB (Pre-Form Billets) to use in warhead loading**

CONVENTIONAL PRESSING

- **Designs include hardened steel tooling to compact explosive powder compositions**
- **Simple cylindrical geometries for charges used in testing & characterization**
- **Use in loading warheads by pressing powder into geometries**
- **Can achieve very high densities**
- **Parameters**
  - Press force
  - Vacuum
  - Temp (powder & tooling)
  - Duration (rate, dwell, cycles)

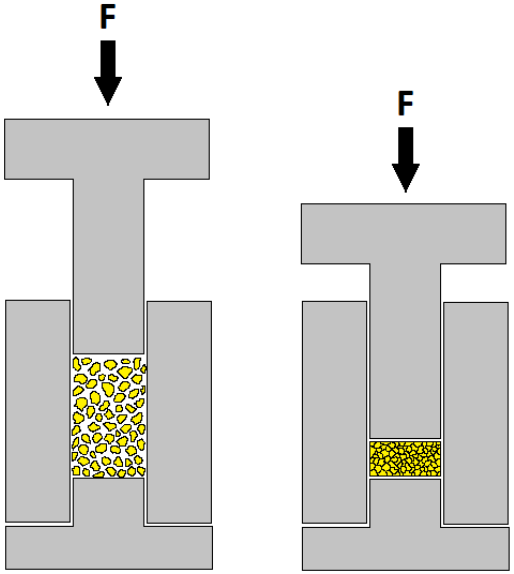

XM1147 LOADING

- **Warhead loading development**
- **HE charge is approximately 2.3kg**
- **Performed in 3 increments**
  - 1 & 2 with a knob faced punch
  - 3 with a flat punch
- **Evaluated several HE formulations**
- **Post machining operations to clean up aft end**
- **Closure disc installed to then seal the warhead**

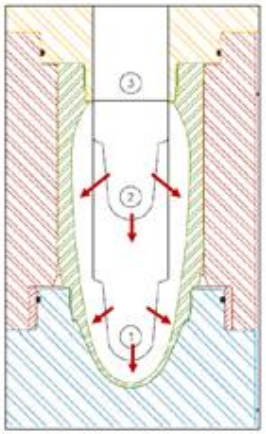

X-RAY OF 3-INCREMENT LOADING

- **Initial x-rays of HE charge had looked good**
  - Averaged 1.85g/cc loading densities for PAX-3
- **Defects became visible after temperature cycling**
  - 24hrs at -60°F (-51°C)
  - 24hrs at 144°F (62°C)
- **Delamination cracks appeared following the punch geometry & location**
- **Attempted a design of experiments to improve loading**
  - Proved unsuccessful to mitigate defects

X-Ray after loading warhead

X-Ray after final cartridge LAP

ISOSTATIC PRESSING CONCEPT

- Die is confined on the ends with
- Soft bag (or sleeve) compresses radially
- Powder is loaded into the bag
- High pressure acting on bag wall compresses radially
- Can achieve high L:D ratios

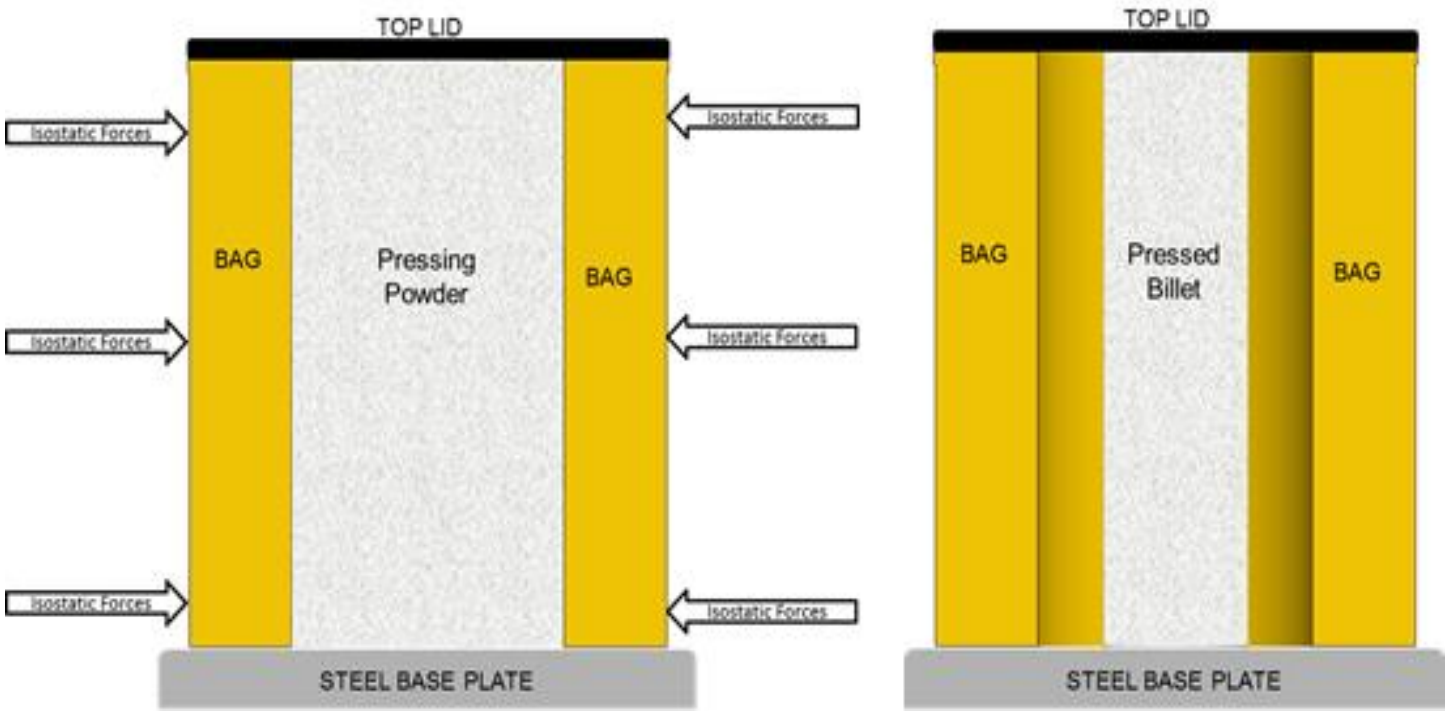

ISOSTATIC PRESSING TOOLING

- **Diagram of tool stack assembly used at CCDC-AC**
- **R&D on technology was performed earlier under an Army ManTech Program**
- **CCDC-AC patented a PFB press process for warheads using this technology**

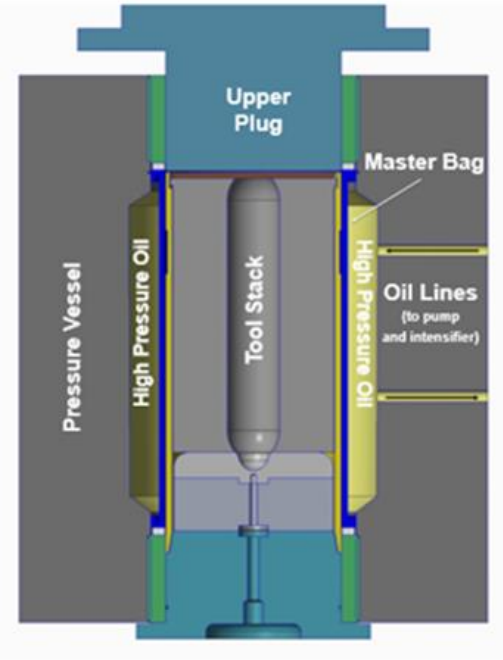

Pressure Vessel Assembly

PAX-3 Isostatic PFB

ISOSTATIC PFB LOADING

- **PAX-3 PFB is placed into the warhead body**
- **PFB is the full HE charge mass**
- **The PFB is loaded in a single increment step**

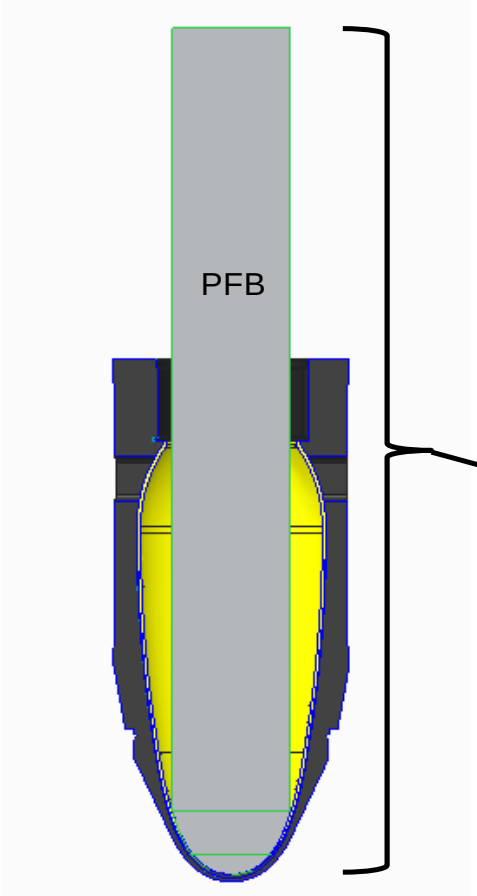

PFB inside an AMP projectile.

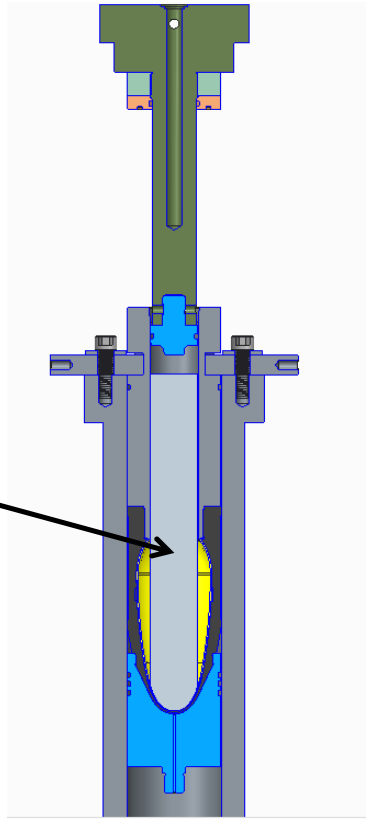

AMP/PFB inside the press tooling column.

XM1147 PAX-3 PFB LOADING

- **Developed tooling to create PAX-3 PFB charges**
  - L:D Ratio ~8:1
  - ~95% TMD

- **X-ray inspection on cartridge had eliminated the delamination cracks that had occurred previously**
  - Increased HE charge mass
  - Less free volume for defects during aging

TECHNOLOGY IMPLEMENTATION

- Initial investigation of process was to provide ~100+ PAX-3 PFB billets to support for PM-MAS & NGIS warhead testing (early 2018)
- Isostatically pressed PFB's proved to increase mass & quality of the warhead loading, and reduce the likelihood of defects from growing
- Upon success, an additional 1100+ PAX-3 PFB were requested for use in the development, test, & engineering build of XM1147 (Aug-Dec 2018)
- In total over 6000lbs (2700kgs) of PAX-3 power was pressed into PFBs at Picatinny Arsenal
- Items were delivered to NGIS to support warhead development

FUTURE PRODUCTION

- While the isostatic pressing is an additional processing step being added, significant time is reduced in loading warhead bodies
- Working to transition technology and implement at the LAP facility
- Will allow for additional capabilities in pressing for the future
- Significant amount of cooperation and team work performed by CCDC-AC, PM-MAS, and NGIS
- Developed and working to implement process for a new technology capable of producing higher quality and safer munitions

Questions?